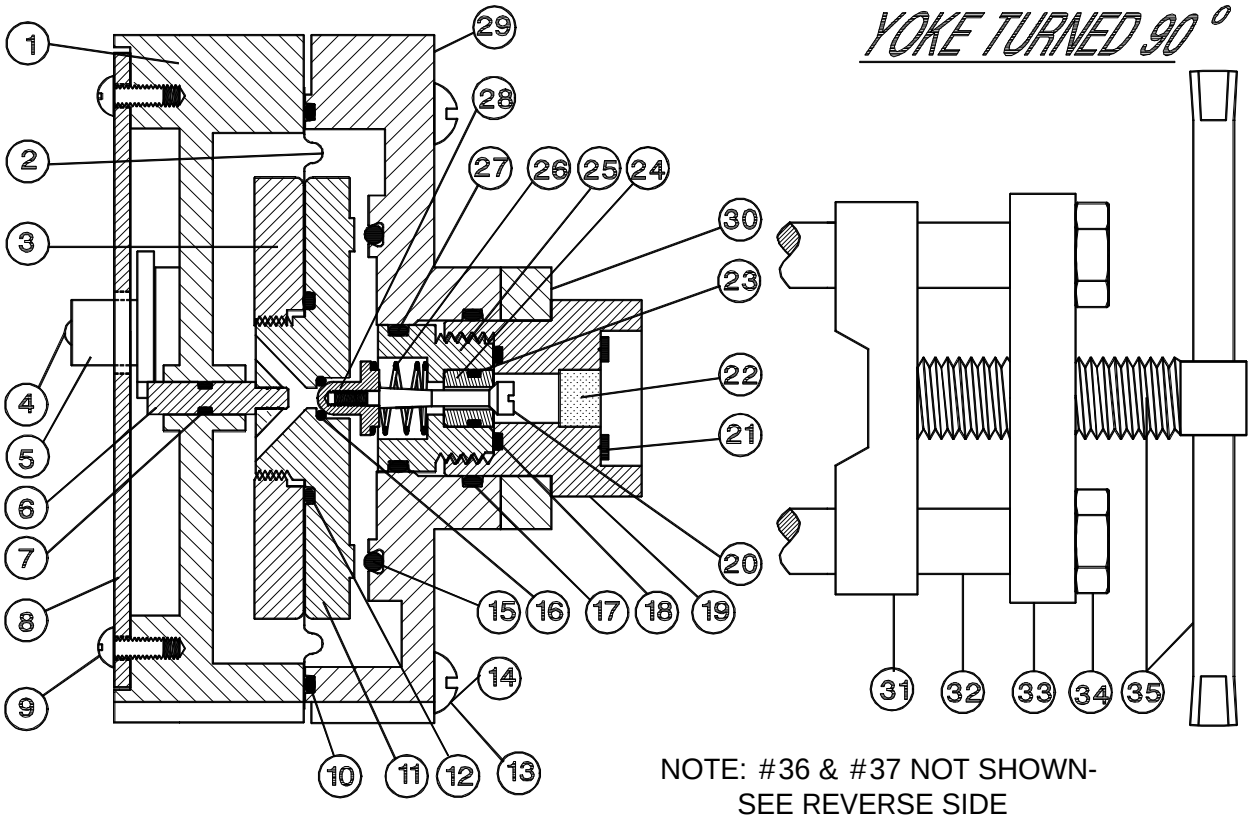

NOTE: #36 & #37 NOT SHOWN-
SEE REVERSE SIDE

REF NO.	QTY	DESCRIPTION	PART NO.	REF NO.	QTY	DESCRIPTION	PART NO.
1	1	VACUUM REGULATOR FRONT BODY	VR-120	21	10	LEAD GASKET	GK-150
2	1	VACUUM REGULATOR DIAPHRAGM	VR-130	22	1	FILTER	YK-169
3	1	DIAPHRAGM FRONT PLATE	VR-150	23	1	INLET VALVE SEAT O-RING	OR-104
4	1	LOSS OF CL_2 INDICATOR SCREW	VR-169	24	1	INLET VALVE SEAT	IV-110
5	1	LOSS OF CL_2 INDICATOR FLAG ASSEMBLY	VR-167	25	1	INLET ADAPTOR PLUG	IV-120
6	1	INDICATOR PIN	VR-160*	26	1	INLET SPRING	IV-160
7	1	INDICATOR O-RING	OR-101	27	1	INLET ADAPTOR PLUG O.D. O-RING	OR-106
8	1	CHLORINATOR FACEPLATE	VR-180	28	1	INLET SPRING GUIDE/VENT PLUG	IV-145
9	2	FACEPLATE SCREW	VR-185	29	1	BACK BODY, UP TO 200 PPD (5 KG/HR)	VR-110
10	1	DIAPHRAGM BODY O-RING	OR-108			BACK BODY, UP TO 500 PPD (10 KG.HR)	VR-510
11	1	DIAPHRAGM BACK PLATE	VR-140*	30	1	YOKE BODY BAR	YK-100**
12	1	DIAPHRAGM PLATE O-RING	OR-107	31	1	YOKE SLIDE BAR	YK-130
13	2	VAC. REGULATOR BODY/YOKE BOLT	VR-170	32	2	YOKE STUD	YK-120**
14	4	VAC. REGULATOR BODY BOLT	VR-171	33	1	YOKE ROD BAR	YK-112
15	1	BACK BODY VACUUM SHUTOFF O-RING	OR-109	34	2	YOKE JAM NUT	YK-110
16	1	VENT O-RING	OR-110	35	1	YOKE SCREW/HANDLE	YK-160
17	1	SECONDARY INLET SAFETY O-RING	OR-113	36 (NOT SHOWN)	1	VACUUM TUBE FITTING 100 PPD (2000 GR/HR	TU-150
18	1	RATE VALVE SEAT/ADAPTOR FACE O-RING	OR-103			VACUUM TUBE FITTING 200 PPD (5 KG/HR)	TU-250
19	1	INLET ADAPTOR	YK-150			VACUUM TUBE FITTING 500 PPD (10 KG/HR)	TU-550
20	1	INLET VALVE PLUG	IV-130	37	1	3/8" VENT TUBE FITTING	TU-150
*NOTE: VR-160 AND VR-140 ARE ASSEMBLED AS VR-141				**NOTE: YK-100 AND YK-120 ARE ASSEMBLED AS YK-115			

CHEMICAL INJECTION TECHNOLOGIES

VACUUM REGULATOR PARTS LIST
MODELS CL-1, CL-2, CL-5, CL-15, CL-25, CL-55

BY: HPS	**DATE: 1 SEP '93**
SCALE: NTS	**DWG NO: VR-1/2/5**

VR-1/2/5 VACUUM REGULATOR

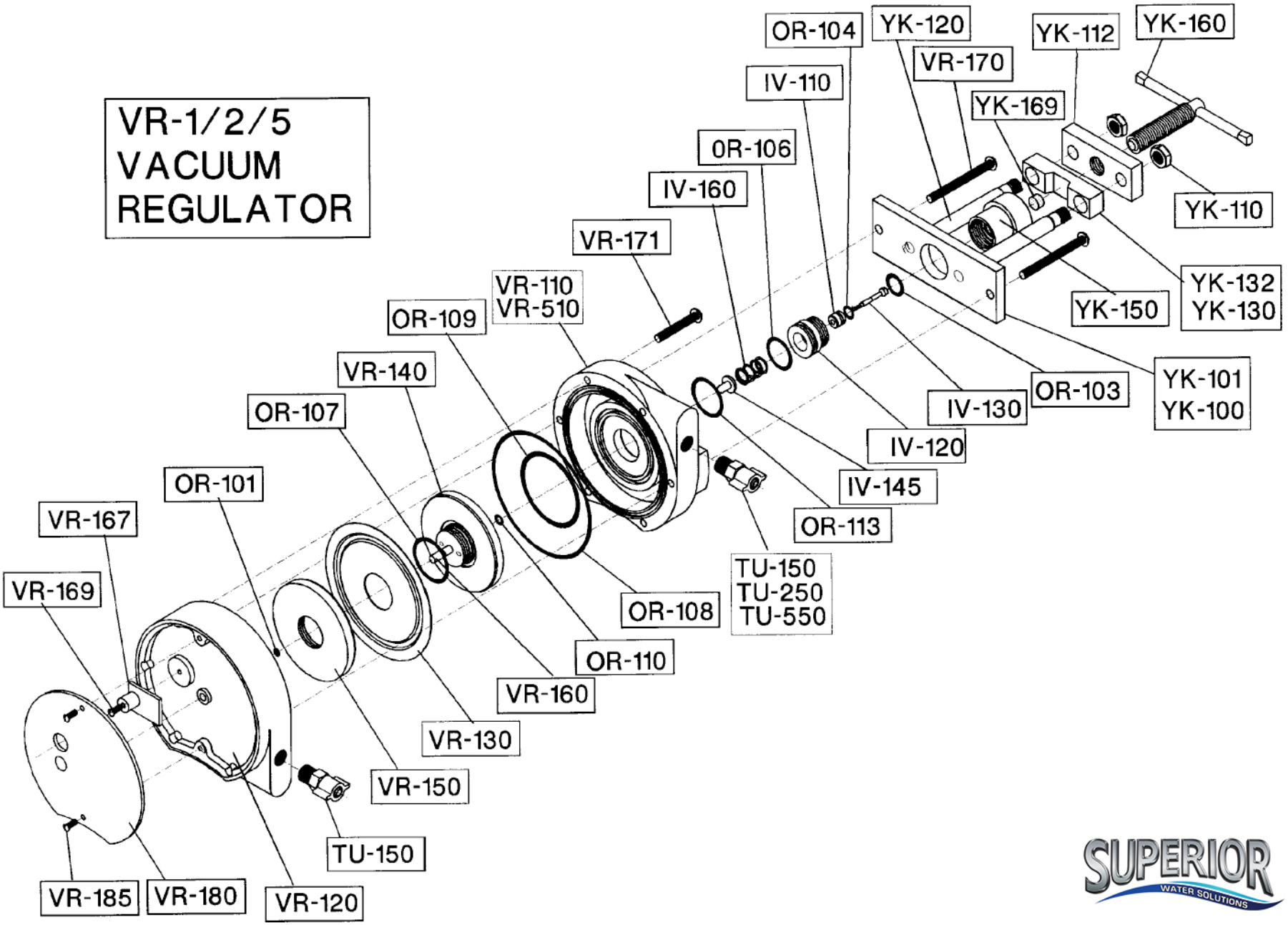

SUPERIOR WATER SOLUTIONS