Chemical Injection Technologies

Product/Specification Bulletin

SUPERIOR™ *Lightning Guard* LG-2 Lightning Arrestor & Surge Protection for 220 VAC & 4-20 mA

I HAVE SURGE PROTECTION...WHY DO I NEED A LIGHTNING ARRESTOR?

Each year, lightning strikes thousands of water & wastewater treatment facilities and industrial plants, causing destruction of valuable, sensitive instrumentation. This is costly not only in terms of equipment replacement, but also in downtime and potential compliance violations. But wait...so many of those facilities have surge protectors and even UPS backups, so why is the equipment destroyed? The simple answer is that those types of protections DO NOT STOP A LIGHTNING STRIKE. They cannot handle the strength and speed of lightning, and are really only designed for electrical surges.

Chemical Injection Technologies has seen the effect of lightning on our own AutoValves, Gas Detectors, Vacuum Alarm Switches and WaterGuard Analyzers. Again, even when surge protection and/or UPS units were used. We were determined to find a way to prevent lightning from finding its way in by any type of wired connection: by AC power or by mA signal wires. We sought out the very best components in the world and designed a complete package that will keep your instruments safe from lightning.

GENERAL DESCRIPTION

LIGHTNING ARRESTOR

The *Lightning Guard* Lightning Arrestor is a single pole, DIN rail mounted unit built in a red thermoplastic housing, based on RADAX flow spark-gap based technology, providing high speed and high energy capacity. It is a new modular design that is intended to be used in 220 Volt single phase systems.

SURGE PROTECTOR

The *Lightning Guard* Surge Protector is a modular DIN rail mounted SPD / TVSS built in a red thermoplastic housing, based on Zinc Oxide Varistor technology, providing high speed and high energy capacity. These devices are designed for all 600 V voltage classes, are UL 3rd Edition Recognized (as well as having other international Standards compliance), and have features to include: an internal thermal disconnect, pluggable MOV replacement, built in status indication, type C contacts for remote status indication, wire or bus bar connection capability, maximum discharge current of 40 kA

4-20 mA INSTRUMENTATION PROTECTOR

The *Lightning Guard* 4-20 mA surge arrestor is a modular DIN rail TVSS for series insertion into low energy measurement and control circuits (typically twisted pair with or without a ground shield), so as to protect the components, controllers, PLC's, and measuring instruments at either end of the circuit, against high energy transients. The unit has a pluggable module which contains the SPD circuitry, permitting the removal of this module to be accomplished without the use of tools or without interruption of the circuit due to a pair of bypass contacts.

Lightning Guard 4-20 mA surge arresters combine a permanently high impulse current discharge capacity with an extremely low protection level for reliable protection of terminal equipment against lightning effects as well as surges resulting from switching operations. They feature a fail-safe function. If an SPD is destroyed by means of lightning or overvoltage incidents exceeding the device specification, generally this causes a short-circuit or an interruption of the signal line. In both cases further overvoltages are interrupted and short-circuited. Thus, the overvoltage can not damage the system to be protected. The signal on the line is also interrupted and the system fails. By simply removing the protection module, the make-before-break switch contact in the base part re-establishes signal transmission. After a new protection module has been plugged in, surge protection is restored again.

Copyright 2013 Chemical Injection Technologies, Inc.

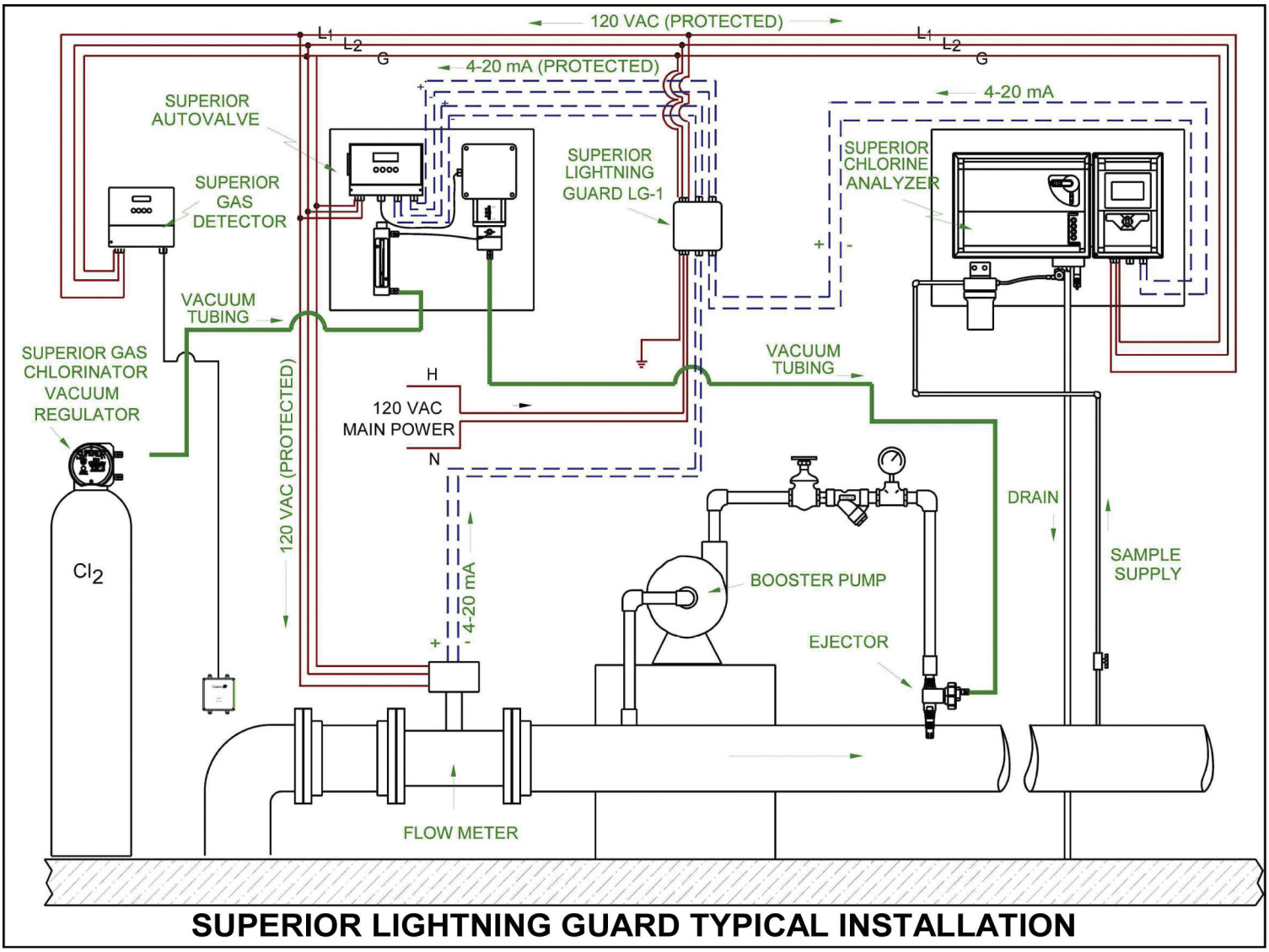

SUPERIOR LIGHTNING GUARD TYPICAL INSTALLATION

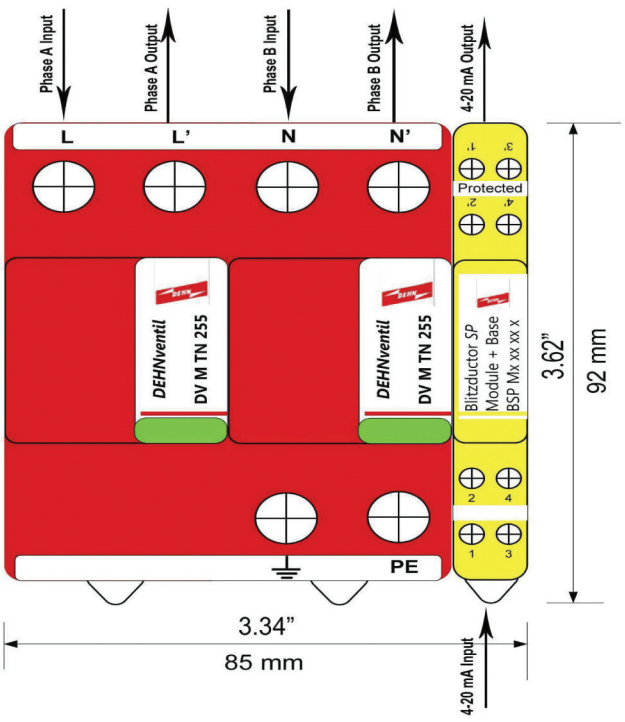

INTERNAL CONNECTIONS

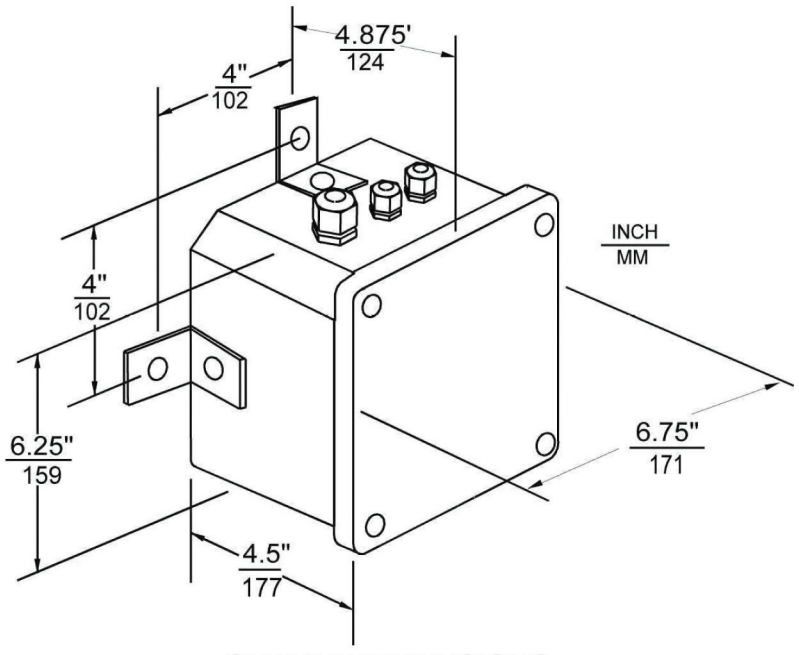

OUTLINE DIMENSIONS

Copyright 2013 Chemical Injection Technologies, Inc.

SPECIFICATIONS: 220 VAC

LIGHTNING ARRESTOR & SURGE PROTECTOR	
SPD according to EN 61643-11 / IEC 61643-1/-11	Type 1 / Class I
Energy coordination with terminal equipment	Type 1 + Type 2
Energy coordination with terminal equipment (≤ 5m)	Type 1 + Type 2 + Type 3
Nominal a.c. voltage (UN)	230 V
Max. continuous operating a.c. voltage (UC)	255 V
Lightning impulse current (10/350 µs) [L+N-PE] (Itotal)	50 kA
Specific energy [L+N-PE] (W/R)	625.00 kJ/ohms
Lightning impulse current (10/350 µs) [L, N-PE] (Iimp)	25 kA
Specific energy [L,N-PE] (W/R)	156.25 kJ/ohms
Nominal discharge current (8/20 µs) (In)	25 / 50 kA
Voltage protection level [L-PE]/[N-PE] (UP)	≤ 1.5 kV / ≤ 1.5 kV
Follow current extinguishing capability a.c. (Ifi)	50 kA_{rms}
Response time (tA)	≤ 100 ns
Follow current limitation/Selectivity	no tripping of a 20 A gL/gG fuse up to 50 kA_{rms} (prosp.)
Max. backup fuse (L) up to IK = 50 kArms	315 A gL/gG
Max. backup fuse (L-L')	125 A gL/gG
Temporary overvoltage (TOV) [L-N] (UT)	440 V / 5 sec.
TOV characteristic	withstand
Operating temperature range [parallel]/[series] (TU)	-40°C...+80°C / -40°C...+60°C
Operating state/fault indication	green / red
Number of ports	1
Cross-sectional area (L, L', N, N', PE, 9) (min.)	10 mm^2 solid/flexible
Cross-sectional area (L, N, PE) (max.)	50 mm^2 stranded/35 mm^2 flexible
Cross-sectional area (L', N', 9) (max.)	35 mm^2 stranded/25 mm^2 flexible
For mounting on	35 mm DIN rails acc. to EN 60715
Enclosure material	thermoplastic, red, UL 94 V-0
Place of installation	indoor installation
Degree of protection	IP 20
Capacity	4 module(s), DIN 43880
Approvals	KEMA, VDE, UL, VdS
Extended technical data:	Use in installations with prospective short-circuit currents of more than 50 kA_{rms} (tested by VDE)
– Maximum prospective short-circuit current	100 kA_{rms} (220 kA_{peak})
– Limitation/extinction of mains follow currents	up to 100 kA_{rms} (220 kA_{peak})
– Max. backup fuse (L) up to IK = 100 kArms	315 A gL/gG
GTIN	4.01336E+12
PU	1 pc(s)

Copyright 2013 Chemical Injection Technologies, Inc.

SPECIFICATIONS: 4 - 20 mA

SP MODULE	
SPD class	T
Nominal voltage (U_N)	24 V
Max. continuous operating d.c. voltage (U_C)	33 V
Max. continuous operating a.c. voltage (U_C)	23.3 V
Nominal current at 45°C (I_L)	0.75 A
C2 Total nominal discharge current (8/20 µs) (I_n)	20 kA
C2 Nominal discharge current (8/20 µs) per line (I_n)	10 kA
Voltage protection level line-line for In C2 (U_p)	≤ 105 V
Voltage protection level line-PG for In C2 (U_p)	≤ 85 V
Voltage protection level line-line at 1 kV/µs C3 (U_p)	≤ 90 V
Voltage protection level line-PG at 1 kV/µs C3 (U_p)	≤ 45 V
Series impedance per line	1.8 ohm(s)
Cut-off frequency line-PG (f_G)	6.8 MHz
Capacitance line-line (C)	≤ 0.5 nF
Capacitance line-PG ©	≤ 1.0 nF
Operating temperature range	-40°C...+80°C
Degree of protection (with plugged-in protection module)	IP 20
Enclosure material	polyamide PA 6.6
Test standards	IEC 61643-21, UL 497B
SIL classification	SIL2 / SIL3
Approvals	UL
PU	1 pc(s)
BASE PART	
Operating temperature range	-40°C...+80°C
Degree of protection	IP 20
For Mounting on	35 mm DIN rails acc. To EN 60715
Connection (input / output)	screw / screw
Earthing via	35 mm DIN rail acc. To EN 60715
ATEX approvals	DEKRA 11ATEX0089 X: II 3 G Ex nA T4 Gc *)
$IECE_X$ approvals	DEK 11.0032X: Ex nA NC 14 Gc *)
Approvals	CSA, VdS, UL, GOST
PU	1 pc(s)

*) only in connection with an approved protection module

Chemical Injection Technologies, Inc.
835 Edwards Rd., Ft. Pierce, FL, 34982, USA
(772) 461-0666 Fax: (772) 460-1847
E-Mail: superior@chlorinators.com
www.chlorinators.com

Copyright 2013 Chemical Injection Technologies, Inc.